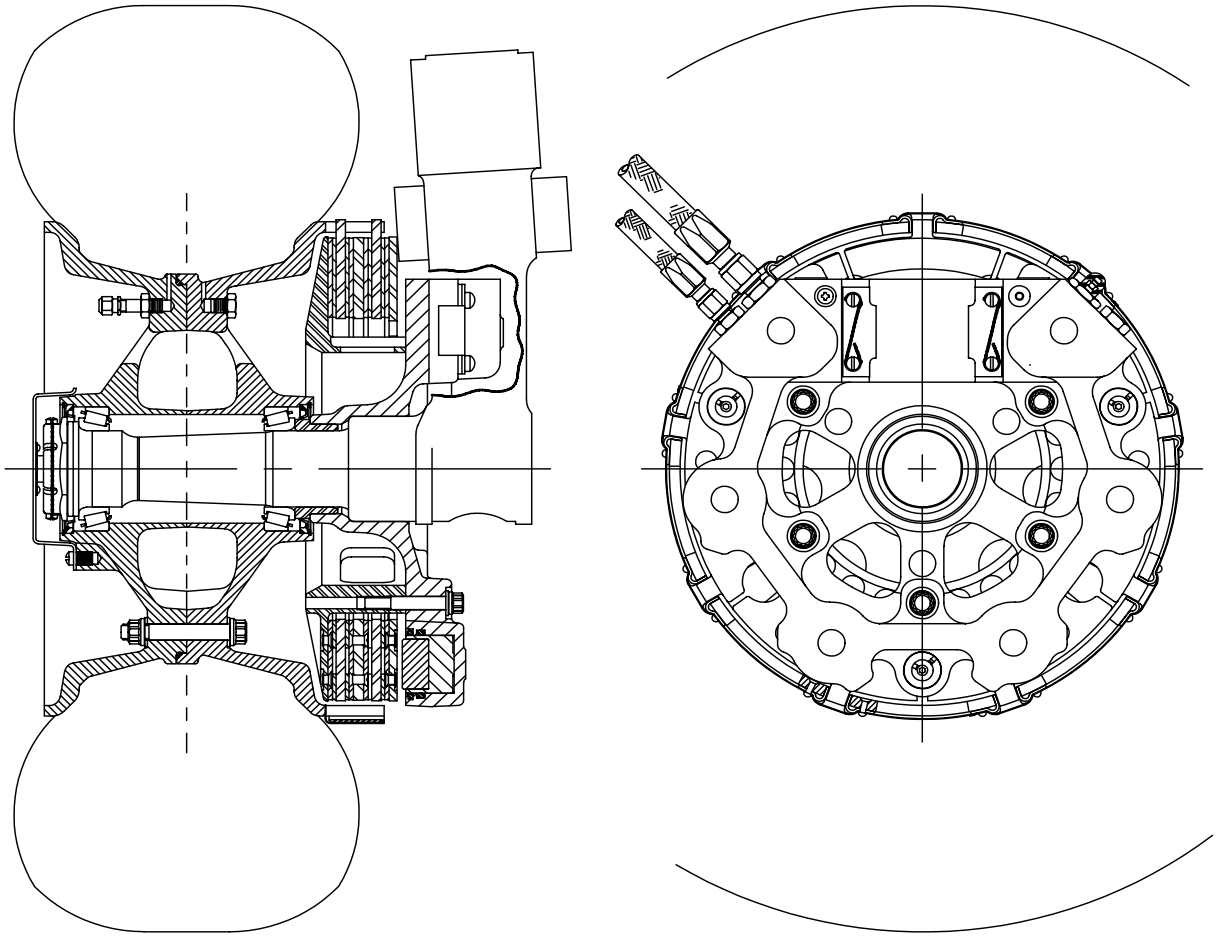

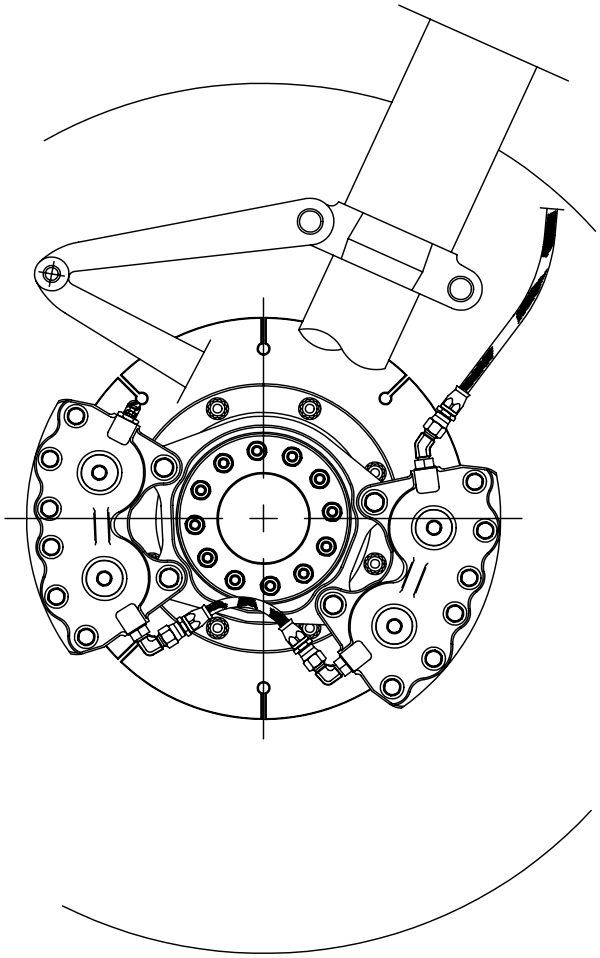

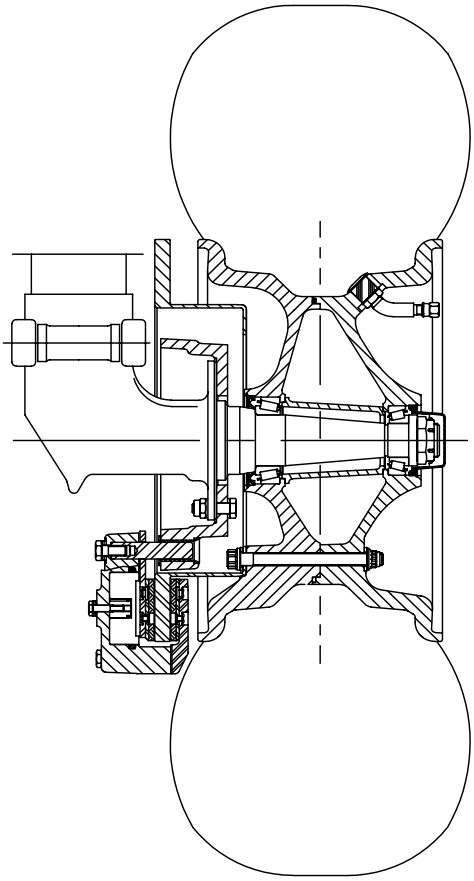

Notes